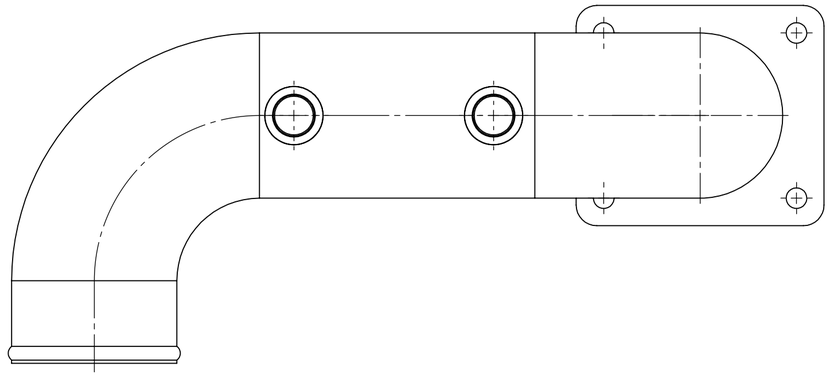

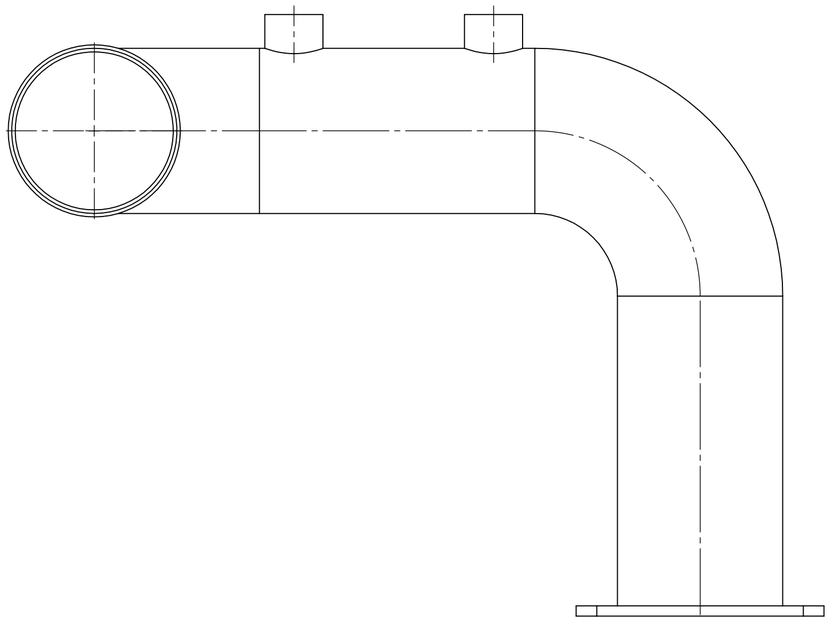

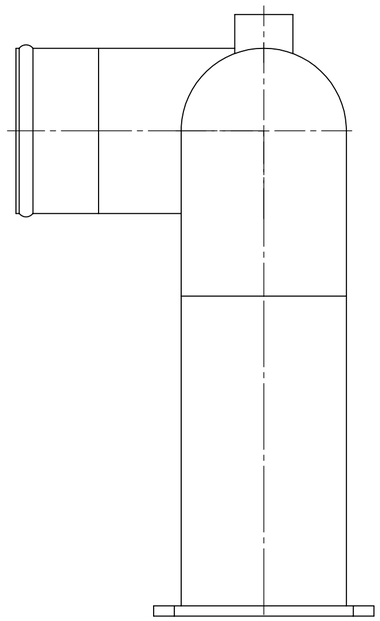

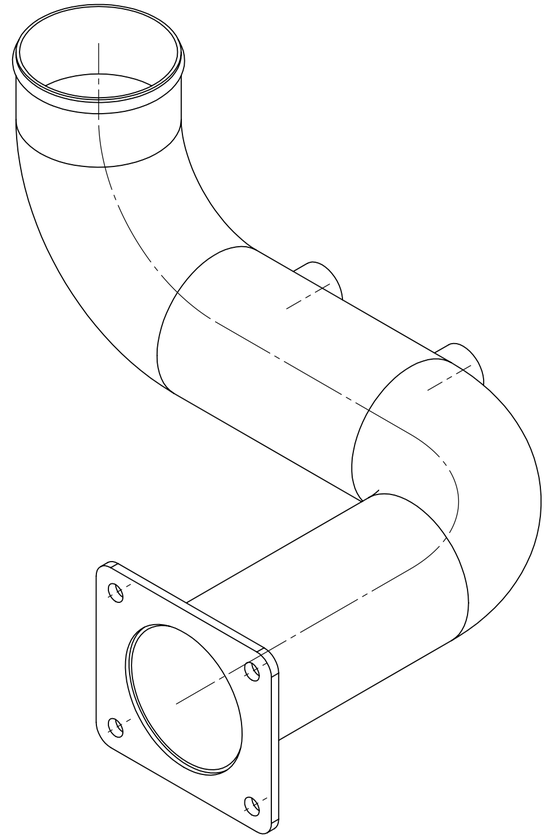

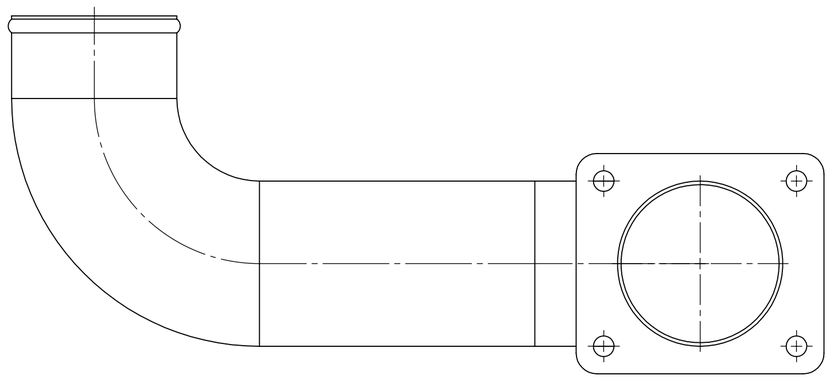

UNLESS OTHERWISE SPECIFIED: DIMENSIONS ARE IN MILLIMETERS SURFACE FINISH: TOLERANCES: LINEAR: ANGULAR:	FINISH:			DEBURR AND BREAK SHARP EDGES	DO NOT SCALE DRAWING / REVISION
	NAME	SIGNATURE	DATE		SOUTHPOINTE RADIATOR
DRAWN					TITLE: FLANGED LOWER COOLANT TUBE
CHK'D					
APPV'D					
MFG					
Q.A				MATERIAL:	DWG NO. 75-KWC5141-PDF A2
				WEIGHT: 4.49	SCALE:1:2 / SHEET 1 OF 1