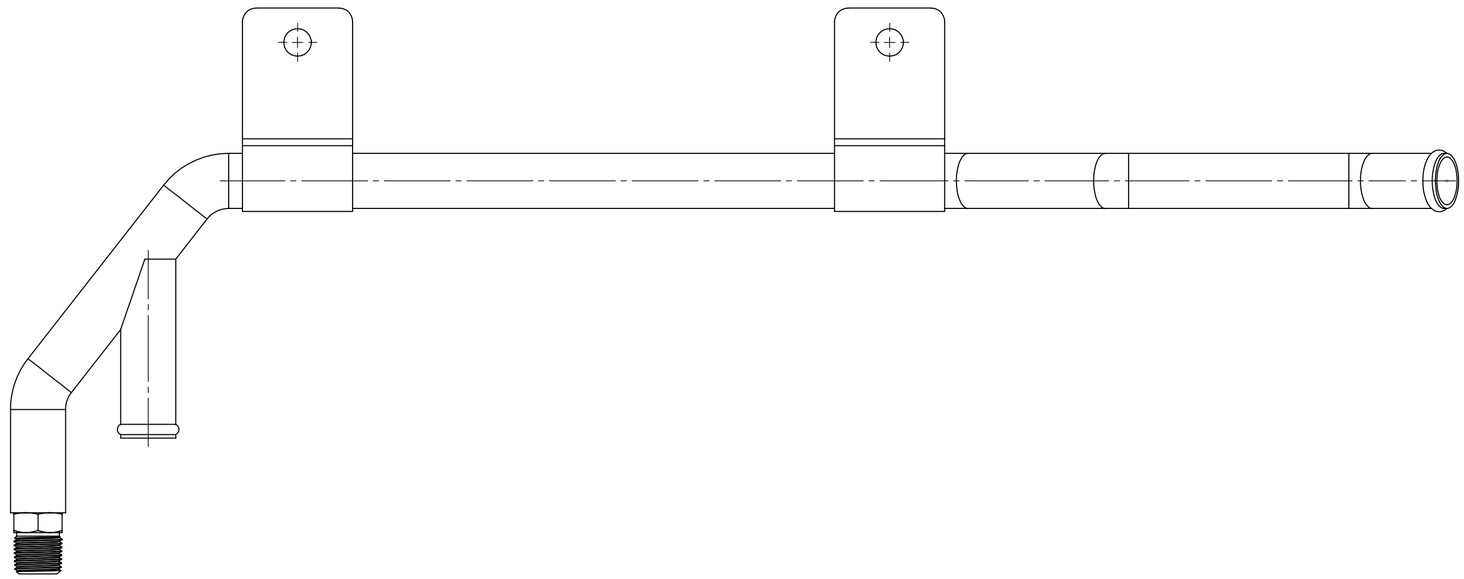

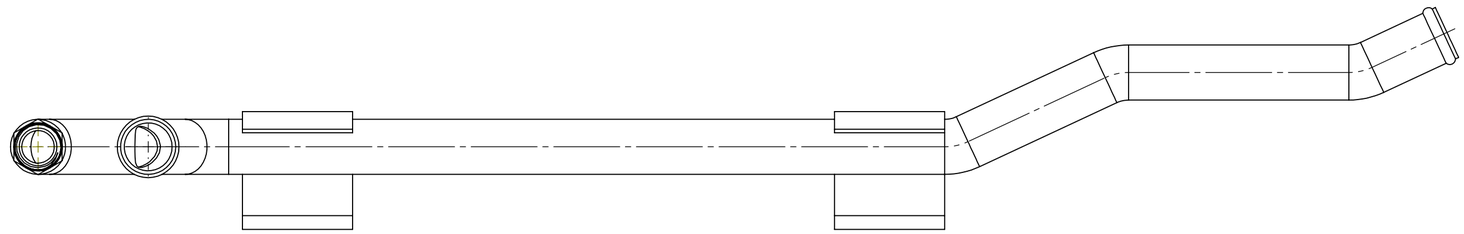

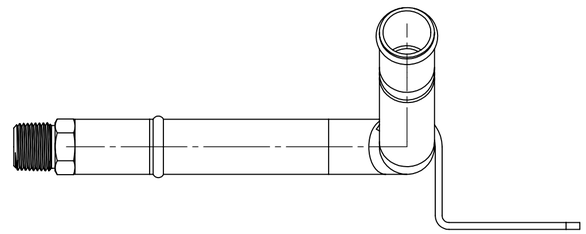

UNLESS OTHERWISE SPECIFIED: DIMENSIONS ARE IN MILLIMETERS SURFACE FINISH: TOLERANCES: LINEAR: ANGULAR:	FINISH:				DEBURR AND BREAK SHARP EDGES	DO NOT SCALE DRAWING / REVISION
	NAME	SIGNATURE	DATE			SOUTHPOINTE RADIATOR
DRAWN						TITLE: HEATER LINE
CHK'D						
APPV'D						
MFG						
Q.A				MATERIAL:		DWG NO. 75-ST19473 / A2
				WEIGHT: 2.60		SCALE:1:5 / SHEET 1 OF 2

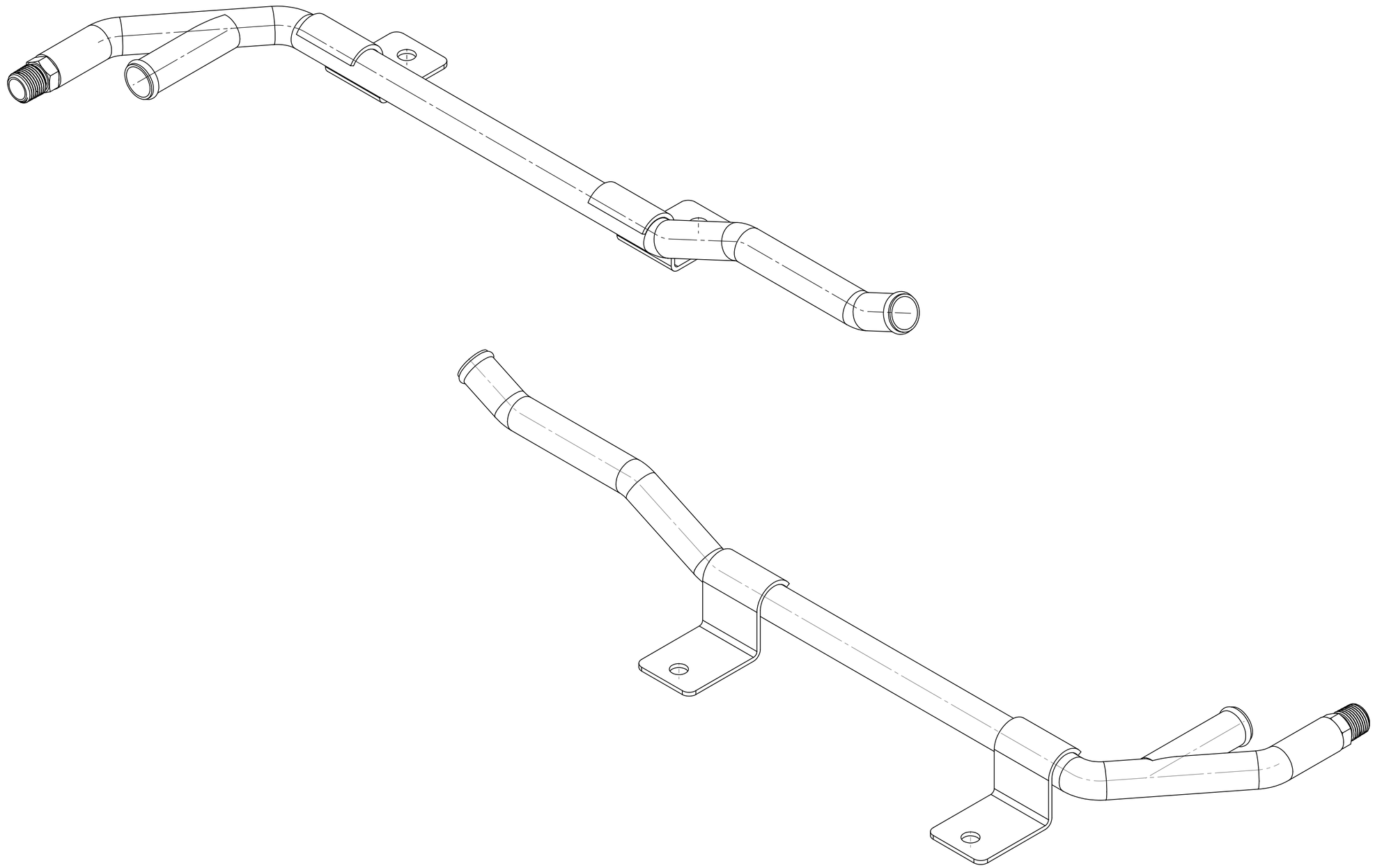

UNLESS OTHERWISE SPECIFIED: DIMENSIONS ARE IN MILLIMETERS SURFACE FINISH: TOLERANCES: LINEAR: ANGULAR:	FINISH:		DEBURR AND BREAK SHARP EDGES	DO NOT SCALE DRAWING	REVISION
				SOUTHPOINTE RADIATOR	
	NAME	SIGNATURE	DATE	TITLE: HEATER LINE	
DRAWN					
CHK'D					
APPV'D					
MFG					
Q.A				MATERIAL:	DWG NO. 75-ST19473 A2
				WEIGHT: 2.60	SCALE:1:5 SHEET 2 OF 2